# RUTM55

5G Industrial Router

Energy & utilities

Enterprise

Industrial & automation

Retail

Smart city

## 5G

Ultra-high cellular speeds of up to 3.4 Gbps

## DUAL SIM & ESIM

Auto-failover, backup WAN, and other switching scenarios

## MULTIPLE INTERFACES

Ethernet, Serial (RS232, RS485) and multiple Inputs/Outputs

## 3-PIN POWER INPUT

Tailored for industrial use

Copyright © 2026, UAB TELTONIKA NETWORKS.
Specifications and information provided in this document are subject to change by UAB TELTONIKA NETWORKS without prior notice.

| Mobile | |
|---|---|
| Mobile module | 5G Sub-6 GHz SA, NSA 2.4, 3.4Gbps DL (4×4 MIMO) 900, 550Mbps UL (2×2 MIMO); 4G LTE: DL Cat 19 1.6Gbps (4×4 MIMO), UL Cat 18 200Mbps |
| 3GPP Release | Release 16 |
| eSIM | Consumer type eSIM, profile download and removal operations, up to 7 eSIM profiles; does not include data plans |
| SIM switch | Dual SIM and eSIM, auto-switch cases: weak signal, data limit, SMS limit, roaming, no network, network denied, data connection fail, SIM idle protection |
| Status | IMSI, ICCID, operator, operator state, data connection state, network type, CA indicator, bandwidth, connected band, signal strength (RSSI), SINR, RSRP, RSRQ, EC/IO, RSCP, data sent/received, LAC, TAC, cell ID, ARFCN, UARFCN, EARFCN, MCC, and MNC |
| SMS | SMS status, SMS configuration, EMAIL to SMS, SMS to EMAIL, SMS to HTTP, SMS to SMS, scheduled SMS, SMS autoreply, SMPP |
| USSD | Supports sending and reading Unstructured Supplementary Service Data messages |
| Block/Allow list | Operator block/allow list (by country or separate operators) |
| Multiple PDN | Possibility to use different PDNs for multiple network access and services |
| Band management | Band lock, Used band status display |
| SIM idle protection service | When working with devices with two SIM slots, the one not currently in use will remain idle until the device switches to it, meaning that no data is used on the card until then |
| SIM PIN code management | SIM PIN code management enables setting, changing, or disabling the SIM card's PIN |
| APN | Auto APN |
| Bridge | Direct connection (bridge) between mobile ISP and device on LAN |
| Passthrough | Router assigns its mobile WAN IP address to another device on LAN |
| Framed routing | Framed routing: support an IP network behind 5G UE |

| Site Manager | |
|---|---|
| Supported modes | Manager |
| Functionalities | Centralized management of TAP access points and Teltonika's managed switches — including device pairing and grouping, FOTA updates, device status monitoring, automatic reboot scheduling with ping/wget health checks, wireless SSID configuration, and VLAN assignment across the site. |

Copyright © 2026, UAB TELTONIKA NETWORKS.
Specifications and information provided in this document are subject to change by UAB TELTONIKA NETWORKS without prior notice.

| Wireless | |
|---|---|
| Wireless mode | 802.11b/g/n/ac Wave 2 (Wi-Fi 5) with data transmission rates up to 867 Mbps (Dual Band, MU-MIMO) |
| Wi-Fi security | WPA2-Enterprise: PEAP, WPA2-PSK, WPA-EAP, WPA-PSK, WPA3-SAE, WPA3-EAP, OWE; AES-CCMP, TKIP, Auto-cipher modes, client separation, EAP-TLS with PKCS#12 certificates, disable auto-reconnect, 802.11w Protected Management Frames (PMF) |
| SSID/ESSID | SSID stealth mode and access control based on MAC address |
| Wi-Fi users | Up to 150 simultaneous connections |
| Wireless Connectivity Features | Wireless mesh (802.11s), fast roaming (802.11r), BSS transition management (802.11v), radio resource measurement (802.11k) |
| Wireless MAC filter | Allowlist, blocklist |
| Wireless QR code generator | Once scanned, a user will automatically enter your network without needing to input login information |

| Ethernet | |
|---|---|
| WAN | 1 x WAN port 10/100/1000 Mbps, compliance with IEEE 802.3, IEEE 802.3u, 802.3az standards, supports auto MDI/MDIX crossover |
| LAN | 3 x LAN ports, 10/100/1000 Mbps, compliance with IEEE 802.3, IEEE 802.3u, 802.3az standards, supports auto MDI/MDIX crossover |

Copyright © 2026, UAB TELTONIKA NETWORKS.
Specifications and information provided in this document are subject to change by UAB TELTONIKA NETWORKS without prior notice.

| Network | |
|---|---|
| Routing | Static routing, Dynamic routing (BGP, OSPF v2, RIP v1/v2, EIGRP, NHRP), Policy based routing |
| Network protocols | TCP, UDP, IPv4, IPv6, ICMP, NTP, DNS, HTTP, HTTPS, SFTP, FTP, SMTP, SSL/TLS, ARP, VRRP, PPP, PPPoE, UPNP, SSH, DHCP, Telnet, SMPP, SNMP, MQTT, Wake On Lan (WOL) |
| VoIP passthrough support | H.323 and SIP-alg protocol NAT helpers, allowing proper routing of VoIP packets |
| Connection monitoring | Ping Reboot, Wget Reboot, Periodic Reboot, LCP and ICMP for link inspection |
| Firewall | Port forward, traffic rules, custom rules, TTL target customisation |
| Firewall status page | View all your Firewall statistics, rules, and rule counters |
| Port management | View device ports, enable and disable each of them, turn auto-configuration on or off, change their transmission speed, and so on |
| Network topology | Visual representation of your network, showing which devices are connected to which other devices |
| Hotspot | Captive portal (hotspot), internal/external Radius server, Radius MAC authentication, SMS authorisation, SSO authentication, internal/external landing page, walled garden, user scripts, URL parameters, user groups, individual user or group limitations, user management, 9 default customisable themes and optionality to upload and download customised hotspot themes |
| DHCP | Static and dynamic IP allocation, DHCP relay, DHCP server configuration, status, static leases: MAC with wildcards |
| QoS / Smart Queue Management (SQM) | Traffic priority queuing by source/destination, service, protocol or port, WMM, 802.11e |
| DDNS | Supported >77 service providers, others can be configured manually |
| DNS over HTTPS | DNS over HTTPS proxy enables secure DNS resolution by routing DNS queries over HTTPS |
| Network backup | Wi-Fi WAN, Mobile, VRRP, Wired options, each of which can be used as an automatic Failover |
| Load balancing | Balance Internet traffic over multiple WAN connections |
| SSHFS | Possibility to mount remote file system via SSH protocol |
| VRF support | Initial virtual routing and forwarding (VRF) support |
| Traffic Management | Real-time monitoring, wireless signal charts, traffic usage history |

Copyright © 2026, UAB TELTONIKA NETWORKS.
Specifications and information provided in this document are subject to change by UAB TELTONIKA NETWORKS without prior notice.

| Security | |
|---|---|
| 802.1x | Port-based network access control client |
| Authentication | Pre-shared key, digital certificates, X.509 certificates, TACACS+, Internal & External RADIUS users authentication, IP & login attempts block, time-based login blocking, built-in random password generator |
| Firewall | Pre-configured firewall rules can be enabled via WebUI, unlimited firewall configuration via CLI; DMZ; NAT; NAT-T |
| Attack prevention | DDOS prevention (SYN flood protection, SSH attack prevention, HTTP/HTTPS attack prevention), port scan prevention (SYN-FIN, SYN-RST, X-mas, NULL flags, FIN scan attacks) |
| VLAN | Port and tag-based VLAN separation |
| Mobile quota control | Mobile data limit, customizable period, start time, warning limit, phone number |
| WEB filter | Block list for blocking out unwanted websites, allow list for specifying allowed sites only |
| Access control | Flexible access control of SSH, Web interface, CLI and Telnet |
| TPM | Identification and authentication module, TPM 2.0 standard |
| Certificate Manager | Certificate creation tool allows to create CA, server, client, let's encrypt, SCEP certificates |

| VPN | |
|---|---|
| OpenVPN | Multiple clients and a server can run simultaneously, 27 encryption methods |
| OpenVPN Encryption | DES-CBC 64, RC2-CBC 128, DES-EDE-CBC 128, DES-EDE3-CBC 192, DESX-CBC 192, BF-CBC 128, RC2-40-CBC 40, CAST5-CBC 128, RC2-64-CBC 64, AES-128-CBC 128, AES-128-CFB 128, AES-128-CFB1 128, AES-128-CFB8 128, AES-128-OFB 128, AES-128-GCM 128, AES-192-CFB 192, AES-192-CFB1 192, AES-192-CFB8 192, AES-192-OFB 192, AES-192-CBC 192, AES-192-GCM 192, AES-256-GCM 256, AES-256-CFB 256, AES-256-CFB1 256, AES-256-CFB8 256, AES-256-OFB 256, AES-256-CBC 256 |
| IPsec | XFRM, IKEv1, IKEv2, with 14 encryption methods for IPsec (3DES, DES, AES128, AES192, AES256, AES128GCM8, AES192GCM8, AES256GCM8, AES128GCM12, AES192GCM12, AES256GCM12, AES128GCM16, AES192GCM16, AES256GCM16) |
| GRE | GRE tunnel, GRE tunnel over IPsec support |
| PPTP, L2TP | Client/Server instances can run simultaneously, L2TPv3, L2TP over IPsec support |
| Stunnel | Proxy designed to add TLS encryption functionality to existing clients and servers without any changes in the program's code |
| DMVPN | Method of building scalable IPsec VPNs, Phase 2 and Phase 3 and Dual Hub support |
| SSTP | SSTP client instance support |
| ZeroTier | ZeroTier VPN client support |
| WireGuard | WireGuard VPN client and server support |
| Tinc | Tinc offers encryption, authentication and compression in it's tunnels. Client and server support. |
| Tailscale | Tailscale offers speed, stability, and simplicity over traditional VPNs. Encrypted point-to-point connections using the open source WireGuard protocol |

Copyright © 2026, UAB TELTONIKA NETWORKS.
Specifications and information provided in this document are subject to change by UAB TELTONIKA NETWORKS without prior notice.

**BacNET**

| | |
|---|---|
| Supported modes | Router |
| Supported connection types | IP, RTU(RS485, USB) |
| Configuration options | Support for multiple BACnet/IP interfaces, Network number assignment, Preconfigured BDT entries for BBMD (BACnet Broadcast Management Device) |

**OPC UA**

| | |
|---|---|
| Supported modes | Client, Server |
| Supported connection types | TCP |

**MQTT Gateway**

| | |
|---|---|
| Modbus MQTT Gateway | Allows sending commands and receiving data from MODBUS Server through MQTT broker |

**MODBUS**

| | |
|---|---|
| Supported modes | Server, Client |
| Supported connection types | TCP, USB |
| Custom registers | MODBUS TCP custom register block requests, which read/write to a file inside the router, and can be used to extend MODBUS TCP Client functionality |
| Supported data formats | 8-bit: INT, UINT; 16-bit: INT, UINT (MSB or LSB first); 32-bit: float, INT, UINT (ABCD (big-endian), DCBA (little-endian), CDAB, BADC), HEX, ASCII |

**Data to Server**

| | |
|---|---|
| Protocol | HTTP(S), MQTT, Azure MQTT |
| Data to server | Extract parameters from multiple sources and different protocols, and send them all to a single server; Custom LUA scripting, allowing scripts to utilize the router's Data to server feature |

**DNP3**

| | |
|---|---|
| Supported modes | TCP Master, DNP3 Outstation |
| Supported connection | TCP, USB |

**DLMS/COSEM**

| | |
|---|---|
| DLMS Support | DLMS - standard protocol for utility meter data exchange |
| Supported modes | Client |
| Supported connection types | TCP |

Copyright © 2026, UAB TELTONIKA NETWORKS.
Specifications and information provided in this document are subject to change by UAB TELTONIKA NETWORKS without prior notice.

| API | |
|---|---|
| Teltonika Networks Web API (beta) support | Expand your device's possibilities by using a set of configurable API endpoints to retrieve or change data. For more information, please refer to this documentation: https://developers.teltonika-networks.com |

| Monitoring & Management | |
|---|---|
| WEB UI | HTTP/HTTPS, status, configuration, FW update, CLI, troubleshoot, multiple event log servers, firmware update availability notifications, event log, system log, kernel log, Internet status |
| FOTA | Firmware update from server, automatic notification |
| SSH | SSH (v1, v2) |
| SMS | SMS status, SMS configuration |
| Call | Reboot, Status, Mobile data on/off, Output on/off, answer/hang-up with a timer, Wi-Fi on/off |
| Email | Receive email message status alerts of various services |
| TR-069 | OpenACS, EasyCwmp, ACSLite, tGem, LibreACS, GenieACS, FreeACS, LibCWMP, Friendly tech, AVSystem |
| MQTT | MQTT Broker, MQTT publisher |
| SNMP | SNMP (v1, v2, v3), SNMP Trap, Brute force protection |
| JSON-RPC | Management API over HTTP/HTTPS |
| RMS | Teltonika Remote Management System (RMS) |

| IoT Platforms | |
|---|---|
| ThingWorx | Allows monitoring of: WAN Type, WAN IP, Mobile Operator Name, Mobile Signal Strength, Mobile Network Type |
| Cumulocity - Cloud of Things | Allows monitoring of: Device Model, Revision and Serial Number, WAN Type and IP, Mobile Cell ID, ICCID, IMEI, Connection Type, Operator, Signal Strength. Has reboot and firmware upgrade actions |
| Azure IoT Hub | Can be configured with Data to Server to send all the available parameters to the cloud. Has Direct method support which allows to execute RutOS API calls on the IoT Hub. Also has Plug and Play integration with Device Provisioning Service that allows zero-touch device provisioning to IoT Hubs |

| System Characteristics | |
|---|---|
| CPU | MediaTek, Dual-Core, 880 MHz, MIPS1004Kc |
| RAM | 256 MB, DDR3 |
| FLASH storage | 16 MB serial NOR flash, 256 MB serial NAND flash |

Copyright © 2026, UAB TELTONIKA NETWORKS.
Specifications and information provided in this document are subject to change by UAB TELTONIKA NETWORKS without prior notice.

| Firmware/Configuration | |
|---|---|
| WEB UI | Update FW from file, check FW on server, configuration profiles, configuration backup |
| FOTA | Update FW |
| RMS | Update FW/configuration for multiple devices at once |
| Keep settings | Update FW without losing current configuration |
| Factory settings reset | A full factory reset restores all system settings, including the IP address, PIN, and user data to the default manufacturer's configuration |

| FIRMWARE CUSTOMISATION | |
|---|---|
| Operating system | RutOS (OpenWrt based Linux OS) |
| Supported languages | Busybox shell, Lua, C, C++, and Python, Java in Package manager |
| Development tools | SDK package with build environment provided |
| GPL customization | You can create your own custom, branded firmware and web page application by changing colours, logos, and other elements in our firmware to fit your or your clients' needs |
| Package Manager | The Package Manager is a service used to install additional software on the device |

| Location Tracking | |
|---|---|
| GNSS | GPS, GLONASS, BeiDou, Galileo and QZSS |
| Coordinates | GNSS coordinates via WebUI, SMS, TAVL, RMS |
| NMEA | NMEA 0183 |
| NTRIP | NTRIP protocol (Networked Transport of RTCM via Internet Protocol) |
| Server software | Supported server software TAVL, RMS |
| Geofencing | Configurable multiple geofence zones |

| Serial | |
|---|---|
| RS232 | Terminal block connector: TX, RX |
| RS485 | Terminal block connector: A,B(2 wire interface) |
| Serial functions | Console, Serial over IP, Modem, MODBUS gateway, NTRIP Client |

| USB | |
|---|---|
| Data rate | USB 2.0 |
| Applications | Samba share, USB-to-serial |
| External devices | Possibility to connect external HDD, flash drive, additional modem, printer, USB-serial adapter |
| Storage formats | FAT, FAT32, exFAT, NTFS (read-only), ext2, ext3, ext4 |

Copyright © 2026, UAB TELTONIKA NETWORKS.
Specifications and information provided in this document are subject to change by UAB TELTONIKA NETWORKS without prior notice.

| Input/Output | |
|---|---|
| Input | 1 x digital dry input (0 - 3 V), 1 x digital galvanically isolated input (0 - 50 V), 1 x analog input (0 - 24 V) |
| Output | 1 x Isolated open collector output (requires external voltage) (50 V, 500 mA), 1 x SPST relay output (24 V, 10 A) |
| Events | Email, RMS, SMS |
| I/O juggler | Allows to set certain I/O conditions to initiate event |

| Power | |
|---|---|
| Connector | 3-pos plugable terminal block |
| Input voltage range | 9 – 50 VDC, reverse polarity protection, surge protection >51 VDC 10us max |
| PoE (passive) | Passive PoE over Port 1; 9-50VDC; "Mode B" style. Not compatible with 802.3af/at/bt. |
| Power consumption | Idle: < 8.5 W, Max: < 14.5 W |

| Physical Interfaces | |
|---|---|
| Ethernet | 4 x RJ45 ports, 10/100/1000 Mbps |
| I/O's | 1 x digital dry input, 1 x digital galvanically isolated input, 1 x analog input, 1 x Isolated open collector output, 1 x SPST relay output |
| Status LEDs | 3 x Mobile connection type, 3 x Mobile connection strength, 6 x LAN status, 1 x Power |
| SIM | 2 x SIM slots (Mini SIM - 2FF), 1.8 V/3 V, internal SIM holders |
| Power | 1 x 3-pin power connector |
| Antennas | 4 x SMA for Mobile, 2 x RP-SMA for Wi-Fi, 1 x SMA for GNSS |
| USB | 1 x USB A port for external devices |
| RS232 | 2 pins in 16-pin terminal block |
| RS485 | 2 pins in 16-pin terminal block |
| Reset | Reboot/User default reset/Factory reset button |

| Physical Specification | |
|---|---|
| Casing material | Anodised aluminium housing and panels |
| Dimensions (W x H x D) | 132 x 44.2 x 95 mm |
| Weight | 430 g |
| Mounting options | DIN rail, wall mount, flat surface (all require additional kit) |

| Operating Environment | |
|---|---|
| Operating temperature | -40 °C to 75 °C |
| Operating humidity | 10% to 90% non-condensing |
| Ingress Protection Rating | IP30 |

Copyright © 2026, UAB TELTONIKA NETWORKS.
Specifications and information provided in this document are subject to change by UAB TELTONIKA NETWORKS without prior notice.

## Certification

| | |
|---|---|
| EMEA | RUTM55 CE<br>RUTM55 UKCA<br>RUTM55 RoHS<br>RUTM55 REACH<br>RUTM55 ICASA |
| APAC | RUTM55 RCM<br>RUTM55 MTCTE |
| MISCELLANEOUS | RUTM55 CB Scheme |
| SAFETY & ENVIROINMENTAL | RUTM55 WEEE |

Copyright © 2026, UAB TELTONIKA NETWORKS.
Specifications and information provided in this document are subject to change by UAB TELTONIKA NETWORKS without prior notice.

# Hardware

## FRONT VIEW

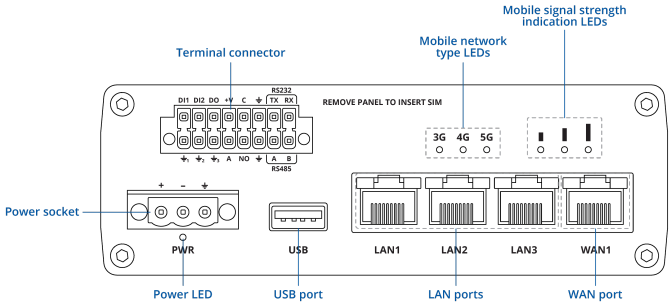


## BACK VIEW

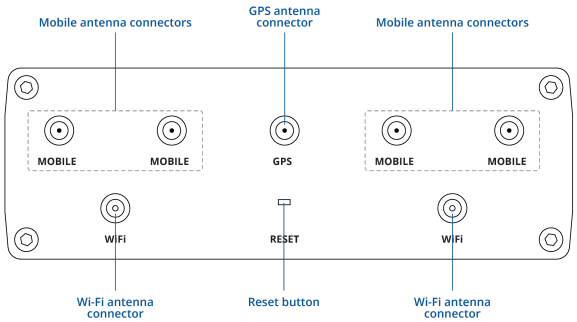


## POWER SOCKET PINOUT

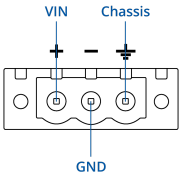


## INPUT/OUTPUT CONNECTOR PINOUT

**DI1** and ⏚₁ - Digital input (dry type):
- 0-1.2 V is detected as logical "1"
- 1.8-3 V is detected as logical "0"

**DI2** and ⏚₂ - Digital galvanically isolated input:
- 0-4 V is detected as logical "0"
- 9-50 V is detected as logical "1"

**DO** and ⏚₃ - Galvanically isolated open collector (OC) output: 50 V, 250 mA.
**+V** - External VCC for DO (<50 V).
**A** - Analog input pin. Analog voltage range 0-30V
**C** & **NO** - Common and Normally Open contacts of the internal Non-Latching Relay respectively.
Maximum relay ratings: 4 A at 24 VDC, 4 A at 40 VAC.
⏚ - GND for RS485 and RS232 pins.
**RS232 TX** - RS232 transmitted data (input)
**RS232 RX** - RS232 received data (output).
**RS485 A** - RS485 driver half-duplex A signal.
**RS485 B** - RS485 driver half-duplex B signal.

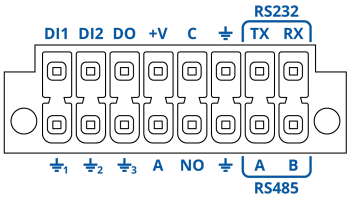


Copyright © 2026, UAB TELTONIKA NETWORKS.
Specifications and information provided in this document are subject to change by UAB TELTONIKA NETWORKS without prior notice.

## Ordering

**Standard package***

RUTM55

3-PIN POWER CONNECTOR

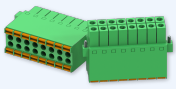

2X8PIN CONNECTOR

HEX KEY

SIM ADAPTER KIT

QUICK START GUIDE

*Standard package contents may differ based on standard order codes.

For more information on all available packaging options – please contact us directly.

Copyright © 2026, UAB TELTONIKA NETWORKS.
Specifications and information provided in this document are subject to change by UAB TELTONIKA NETWORKS without prior notice.

## Classification codes

**HS Code:** 851762
**HTS:** 8517.62.00

For more information on all available packaging options – please contact us directly.

## Available versions

| Hardware version | Supported frequencies | Standard order code / Package Contains |
|---|---|---|
| RUTM55 **0*****<br>EMEA[1], APAC, Brazil | **5G NR NSA:** n1, n3, n5, n7, n8, n20, n28, n38, n40, n41, n71, n75, n76, n77, n78<br>**5G NR SA:** n38, n40, n41, n77, n78<br>**4G (LTE-FDD):** B1, B3, B5, B7, B8, B20, B28, B32, B71<br>**4G (LTE-TDD):** B38, B40, B41, B42, B43<br>**3G:** B1, B5, B8 | RUTM55000000 / Standard package<br>RUTM55000200 / Mass packing code |

The price and lead-times for region (operator) specific versions may vary. For more information please contact us.

1 - Regional availability - excluding Russia, Belarus & Iran

## RUTM55 spatial measurements

| Available versions | |
|---|---|
| Device housing (W x H x D) | 132 x 44.2 x 95 mm |
| Box: | 135 x 47 x 120 mm |

Copyright © 2026, UAB TELTONIKA NETWORKS.
Specifications and information provided in this document are subject to change by UAB TELTONIKA NETWORKS without prior notice.

## TOP VIEW

The figure below depicts the measurements of device and its components as seen from the top:

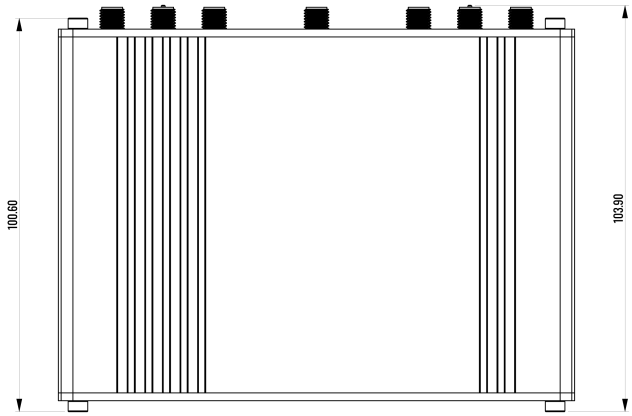


## LEFT VIEW

The figure below depicts the measurements of device and its components as seen from the left:

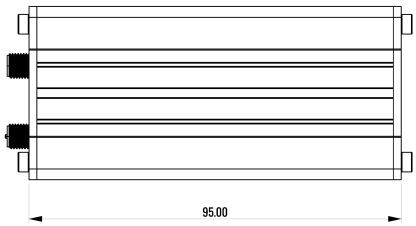


## FRONT VIEW

The figure below depicts the measurements of device and its components as seen from the front panel side:

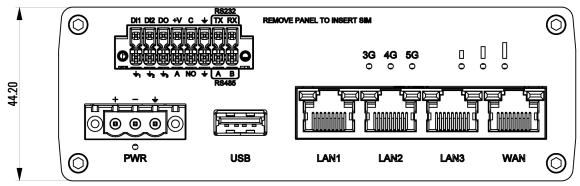


## REAR VIEW

The figure below depicts the measurements of device and its components as seen from the back panel side:

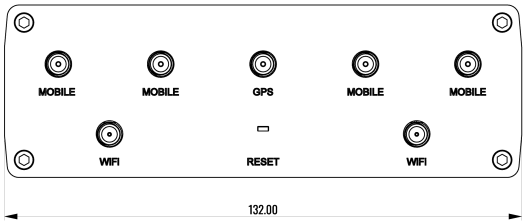


Copyright © 2026, UAB TELTONIKA NETWORKS.
Specifications and information provided in this document are subject to change by UAB TELTONIKA NETWORKS without prior notice.

## MOUNTING SPACE REQUIREMENTS

The figure below depicts an approximation of the device's dimensions when cables and antennas are attached:

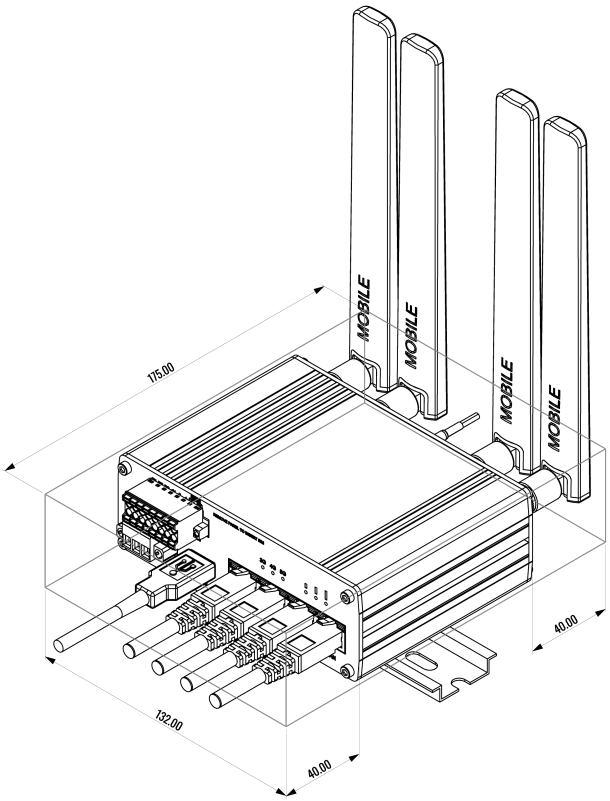


## DIN RAIL

The scheme below depicts protrusion measurements of an attached DIN Rail:

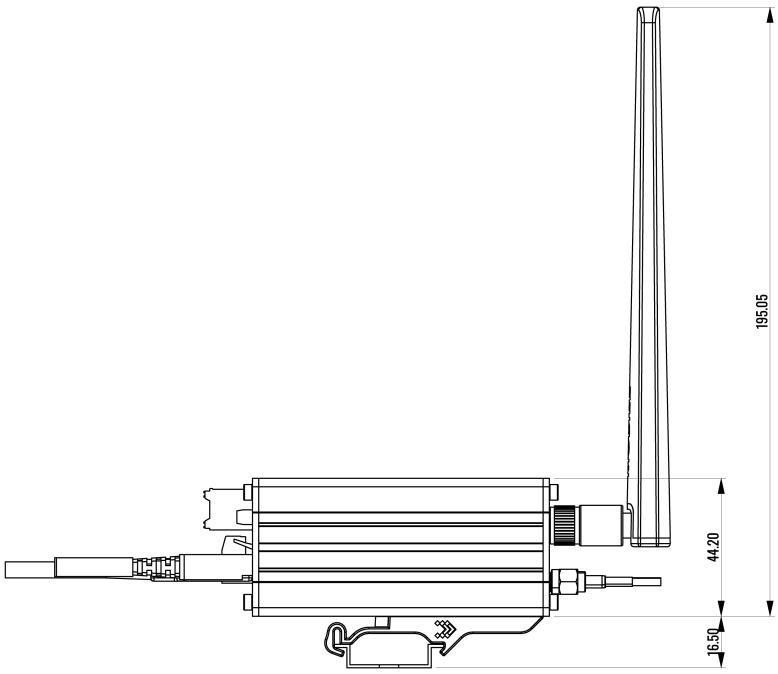


Copyright © 2026, UAB TELTONIKA NETWORKS.
Specifications and information provided in this document are subject to change by UAB TELTONIKA NETWORKS without prior notice.

Copyright © 2026, UAB TELTONIKA NETWORKS.
Specifications and information provided in this document are subject to change by UAB TELTONIKA NETWORKS without prior notice.